THE ANNALS OF "DUNAREA DE JOS" UNIVERSITY OF GALATI
FASCICLE XIV MECHANICAL ENGINEERING, ISSN 1224-5615
2009

PERFORMANCES ASSESSMENT FROM AN EARTHMOVING MACHINE THROUGH POWER MONITORING

Lecturer PhD. Eng. Carmen DEBELEAC
MECMET - The Research Center of Machines, Mechanic and Technological Equipments
"Dunarea de Jos" University of Galati

ABSTRACT

The research presented in this paper focuses on wheel loaders, which are representative for earthmoving machines. The author presents the acquired results for measuring dynamical performances by using a new method based on monitoring of the main parameters of earthmoving equipment drive system, with priority on theirs dynamic behavior (e.g. pressure, flow data and engine power). In this way, it was identified the dynamic transitory phenomenon which appears during a standard working cycle of earthmoving machines.

KEYWORDS: loader, working cycle, dynamic stages, power, performance.

1. Introduction

In the last years, the author remarked an intensive preoccupation of the designers of earthmoving equipments to maximize the technological and functional performances of these machines. All these aspects can be solved by an attentive analyze of dynamic work stages of these earthmoving equipments, knowing that the dynamical and transitory phenomena are that one which consumes substantially the resources of power machine.

Thus, is pointed out a new direction to identify the performances equipments by temporal parameters evolution of specifically dynamic work of these equipments. But, exist a great variety of parameters which influences the vibration behavior of the machine and which are mixed.

2. Description of earthmoving equipment and his working cycle

The research presented in this paper focuses on smallest sized wheel loaders who are often built with a hydrostatic drive train, the nominal operating weight of 5 tons and 45 CP engine power. One of the most common applications for a wheel loader is the short V-cycle, as can be seen in Figure 1. Ten phases composed this working cycle:

- phase 1: bucket filling;
- phase 2: leaving bank;
- phase 3: retardation;
- phase 4: reversing;
- phase 5: towards load receiver;
- phase 6: bucket emptying;
- phase 7: leaving load receiver;
- phase 8: retardation and reversing;
- phase 9: towards bank;

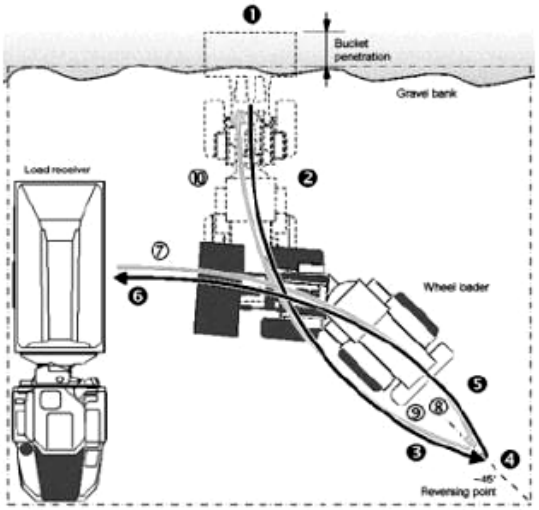

Fig. 1 Loading cycle of loader

- phase 10: retardation at bank.

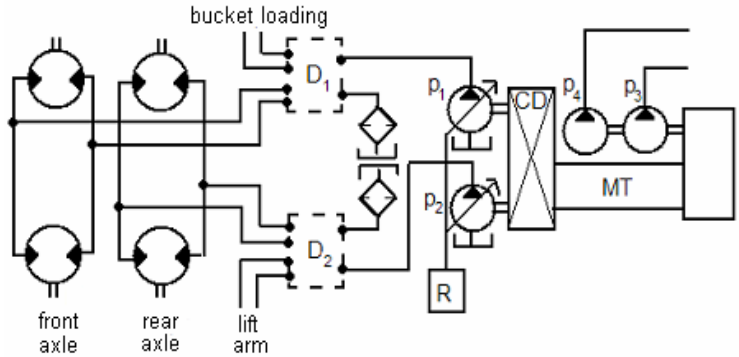

Fig. 2 Hydraulic Wheel Loader System Circuit

This loader uses a closed circuit dual path structure. In dual path applications, there are two separate pumps or a single tandem pump (see Figure 2). Each pump provides oil flow to the motors on each side of the vehicle.

The power transfer scheme presented in Figure 3 visualizes how the diesel engine's power is split up between hydraulic and drive train, which are two parallel sub-systems [1].

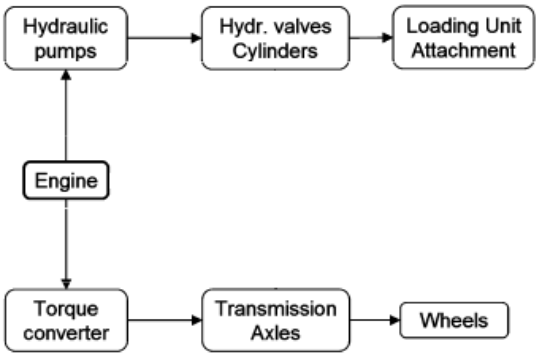

Fig. 3 Power transfer scheme of wheel loader

The way the power is distributed between hydraulics and drive train depends on how much power is requested from the different systems. Working phases involve the complex interaction of the loader power train, hydraulics, implement linkage, and steering system. Machine behavior is a function of these systems and their interactions and how the operator uses them. It is difficult to determine how a change in an individual system can affect the overall machine performance.

These interactions are highly nonlinear and dynamic, making them difficult to understand completely. On the loading process of loader, each phase of the working cycle is influenced by the diversified parameters, who increased overall performances by generated dynamical actions into equipment structure and hydraulic drive system [2],[7].

3. Nonlinear evolution of the peculiarity parameters of loader

The nonlinear evolution of the resistive forces action (into penetration phase) on the bucket loader was shown on experimental essay[10], see Figure 4, where x is penetration into a pile and L – the bucket length.

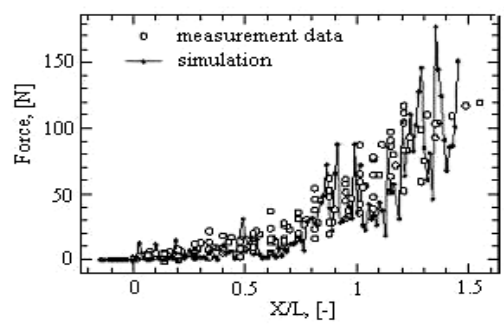

Fig. 4 Resistive forces into penetration phase

It is well known the fact that the power parameter accumulates the influences due to all internal and external perturbations of machine. In this case, measurement data include the pressure and flow data into two circuits, see Figure 5 and Figure 6 [4], [10].

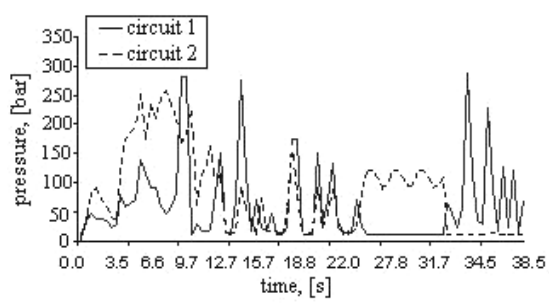

Fig. 5 Measurement pressure data

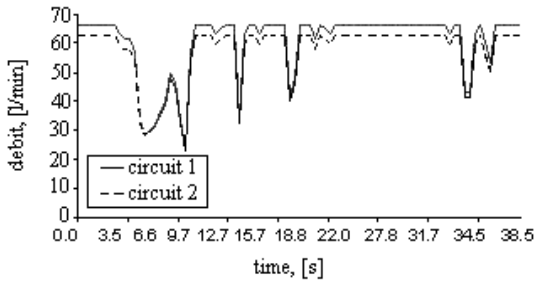

Fig. 6 Measurement flow data

By processing the pressure and flow data is possible to evaluation the instantaneous engine power needed (*N*), on the whole working cycle, see Figure 7.

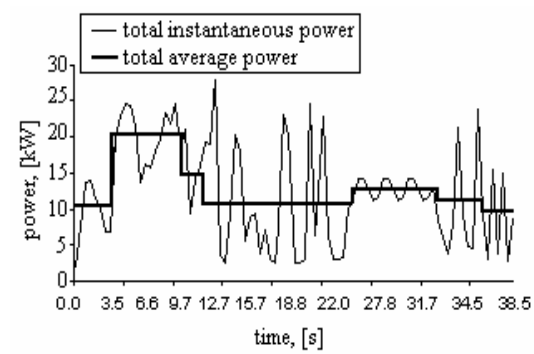

Fig. 7 Monitoring power per working cycle

The distribution of engine power to hydraulics and drive train seems on average to be approximately equal (Figure 8), however with large deviations from that rule [3], [8].

Most engine power is required during bucket filling. The oscillations in power and in distribution ratio are a reflection of the operator's bucket filling technique and the work place conditions. Mapping the data displayed above on power requirements to the power available at the current engine speed gives an indication of the wheel loader performance margins.

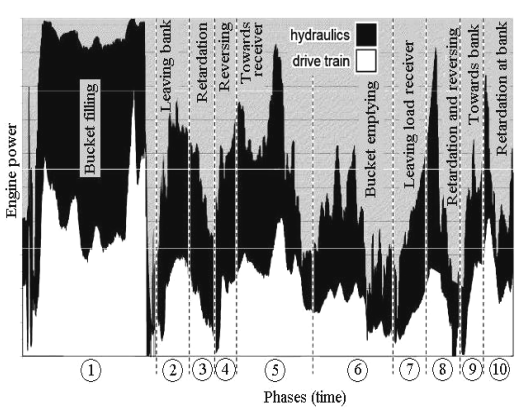

Fig. 8 Map power transmission of loader

4. Description method

Concept of this method consists to monitoring instantaneous consumption of engine power from each phase of working cycle with the loader. The processing and analyze this parameter (engine power) with help of statistical theory is justifiable by the prevalent random character of the peculiarity parameters evolution from cycle work of these machines [5]. Using statistical analyze, it can characterize the signal properties with a set of operators such as: random variable (p_i, $i=1, 2..., n$), average, standard deviation and root-mean-square (Figure 9).

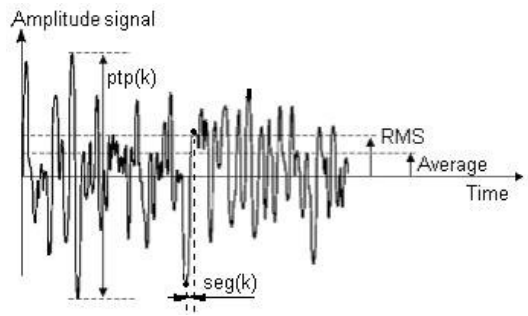

Fig. 9 Schematic diagram

Starting from these theoretical considerations it is enunciated the following hypotheses to implement this procedure:

- average value of power variation (p), differs from a driving situation to another. This operator quantifies stationary values of each phase;
- standard deviation (σ) of power, on each driving situation, puts into evidence the transitory values of each phase;
- root mean square *(RMS)* is used to quantify the overall energy content of the signal.

The author introduce the next denotes with following signification:

N_{static} - power in steady regime and it is estimated by the statistical average of the instantaneous values purchased during the respective phase;

$N_{dynamic}$ - additional power necessary for the transitory regime of the machine;

$N_{effective}$ - the real needed power in to real loader conditions;

N_{max} - maxim engine power.

Knowing of needed power, in each working phases with loader, it is possible to calculation four indexes (Figure 10) which indicates machine performance [4], [5], such as:

$$i_1 = N_{static} / N_{max}; i_2 = N_{dynamic} / N_{max};$$
$$i_3 = N_{effective} / N_{max}; i_4 = N_{effective} / N_{static}. \quad (1)$$

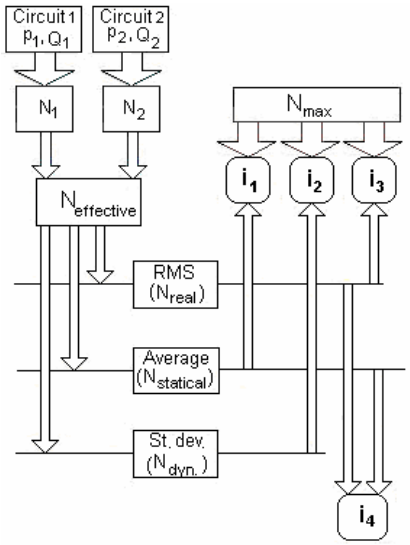

Fig. 10 Scheme work

5. Results and conclusions

The author was presented one application [9] for LDH loader (45 HP) in three driving situations: drive, load, and haul, see Figure 11-13.

The method described in this paper presents the following advantages:

- identifies the oscillations produced in the hydraulic drive system of the machine due of the cumulative dynamic actions which appears during time work, by pressure and debit's measurements;
- identifies the high power consumption phases also it's transmission between the work phases;
- performances analyses through by the dynamic indexes determination i_1-i_4;
- the simplicity of the measurement and monitoring analyze parameters;
- characterizes globally, in dynamic conditions, the earthmoving machine performances, by power tipified range (small, medium, and big).

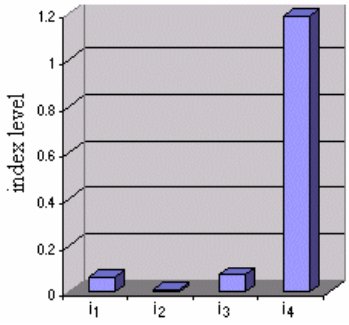

Fig. 11 Bucket filling phase

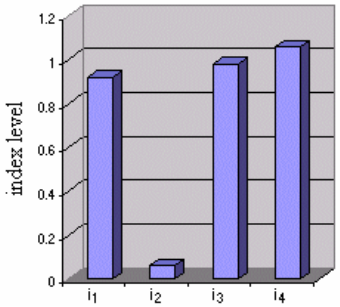

Fig. 12 Leaving bank phase

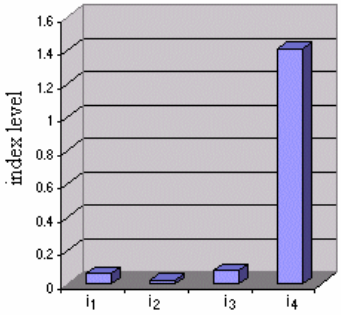

Fig. 13 Retardation and reversing phase

References

[1] **Andersson K., Sellgren U.** *Reality-driven virtual wheel loader operation*, Proceedings of Virtual Concept 2005, Biarritz, France, 2005.

[2] **Axinti G.** *The analysis of structural, dynamic and energetic performances at frontal loader with bucket (Analiza performantelor structurale, dinamice si energetice la incarcatoarele frontale cu o cupa)*, Impuls Publishing House, Bucharest, Romania, 1998.

[3] **Bohman M.** *On predicting fuel consumption and productivity of wheel loaders*, Master's Thesis, Lulea University od Techology, 2006.

[4] **Debeleac C.** *The analysis of dynamic stage of speedy frontal loader with a view to establish the qualities performances (Analiza regimului dinamic la incarcatoarele frontale rapide in vederea stabilirii performantelor de calitate)*, Doctoral Thesis, "Dunarea de Jos" University of Galatzi, 2006.

[5] **Debeleac C.** *Vibratory diagnosis of the earthmoving machines for the additional necessary power level evaluation,* Proceedings of the 9th WSEAS International Conference on Acoustics & Music: Theory & Applications, Bucharest, Romania, p. 89-93, 2008.

[6] **Eriksson, A., Slattengren, J.-A.** *A model for predicting digging forces when working in gravel or other granulated material*, The 15th ADAMS User Conference, Rome, 2000.

[7] **Filla, R.** *Operator and Machine Models for Dynamic Simulation of Construction Machinery*, Doctoral Thesis, Linköping University, Sweden, 2004.

[8] **Järviluoma, M.** *Driving situation identification based on vibration measurement in heavy work machines*, VTT Technical Research Centre of Finland, Research report, VTT – R – 05388 - 06, 2006.

[9] **Nastac, S., Panfiloiu, Gh.** *Design and utilisation of the virtual instrumentation. LabVIEW applications (Proiectarea si utilizarea instrumentatiei virtuale. Aplicatii in LabVIEW)*, Published by Impuls, Bucharest, Romania, 2006.

[10] **Takahashi, H.** *Simulation of the resistive forces acting on the bucket of wheel loader by use of DEM*, Proc. 5th Conference ISTVS, Seoul Korea, p.37-44, 1998.